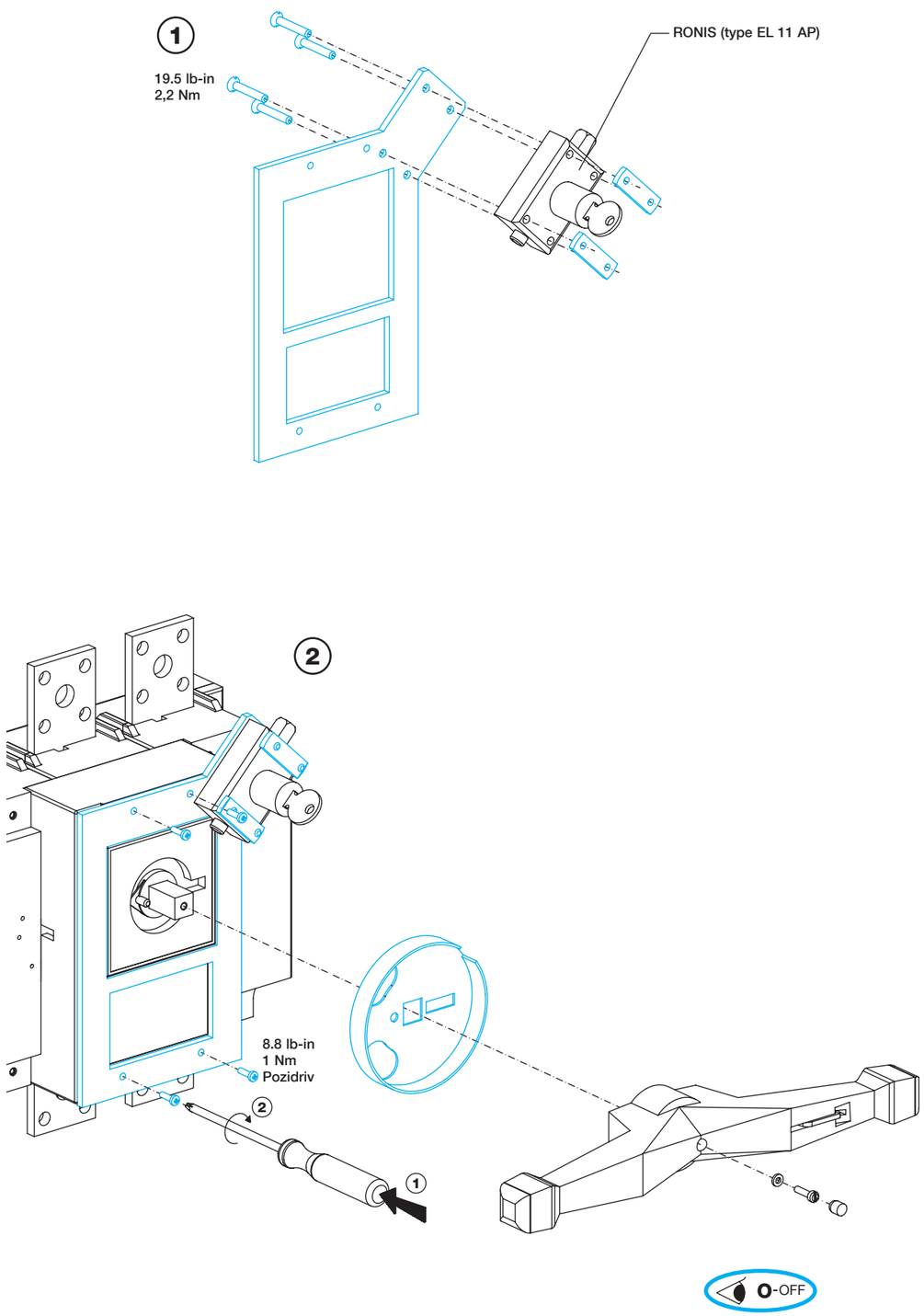

NMO 528940-H		C	PRF	JMK	10-12-12
			ETABLI Issued	VERIFIE Checked	DATE Date

Dual dimensions in
Double dimensions mm

Padlocking the handle
Cadenassage de la poignée

min. Ø 0.19 in / Ø 5 mm
max. Ø 0.31 in / Ø 8 mm

1x 2x 3x

O-OFF

Screw 6.8 Vis 6.8	Tightening torque Couple de serrage Min.	Max.
M 8	73.5 lb-in 8,3 Nm	115 lb-in 13 Nm
M 10	177 lb-in 20 Nm	230 lb-in 26 Nm
M 12	354 lb-in 40 Nm	398.5 lb-in 45 Nm

O-OFF

A Direct handle
Commande directe

17.5 lb.in
2 Nm

Size 7

17.5 lb.in
2 Nm

17.5 lb.in
2 Nm

Allen key size 5
6 pans de 5

26.5 lb.in
3 Nm

Only used with IP65
Uniquement utilisé en IP65

C Shaft extension
Prolongateur d'axe

17.5 lb.in
2 Nm

B Door interlocked handle
Commande extérieure

17.5 lb.in
2 Nm

Mounting orientation
Sens de montage

Shaft length
Longueur d'axe

L = X - 2 in
L = X - 51 ±1 mm

L

X

Door drilling
Perçage de porte

Ø 1.22 in
Ø 31 mm

O

90°

1.96 in
50 mm

I

4 Ø 0.17 in
4 Ø 4,5 mm

1.96 in
50 mm

RECTO-VERSO / S blanc offset 100g/m² / Imp. Bleu pnatone 299C / F 297x420

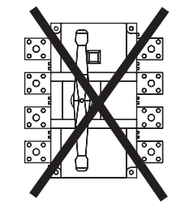

Mounting orientation
Sens de montage

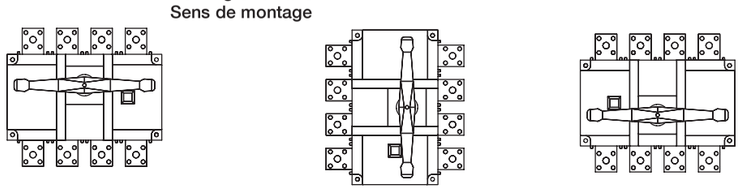

Padlocking the handle
Cadenassage de la poignée

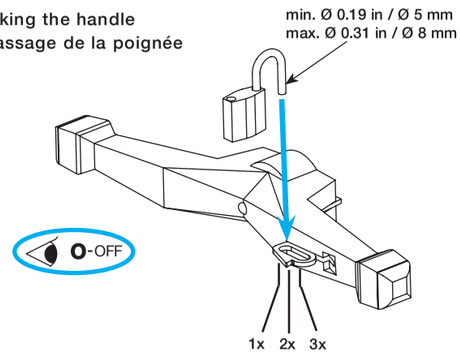

Door drilling
Perçage de porte

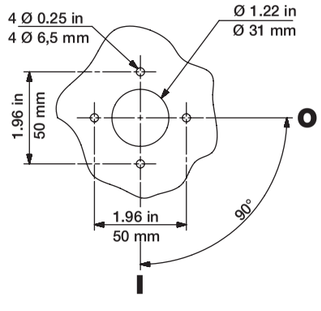

Shaft length
Longueur d'axe

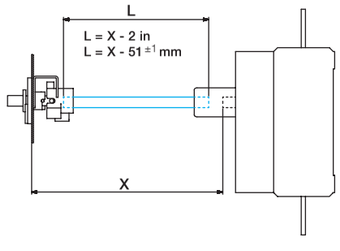

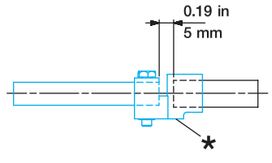

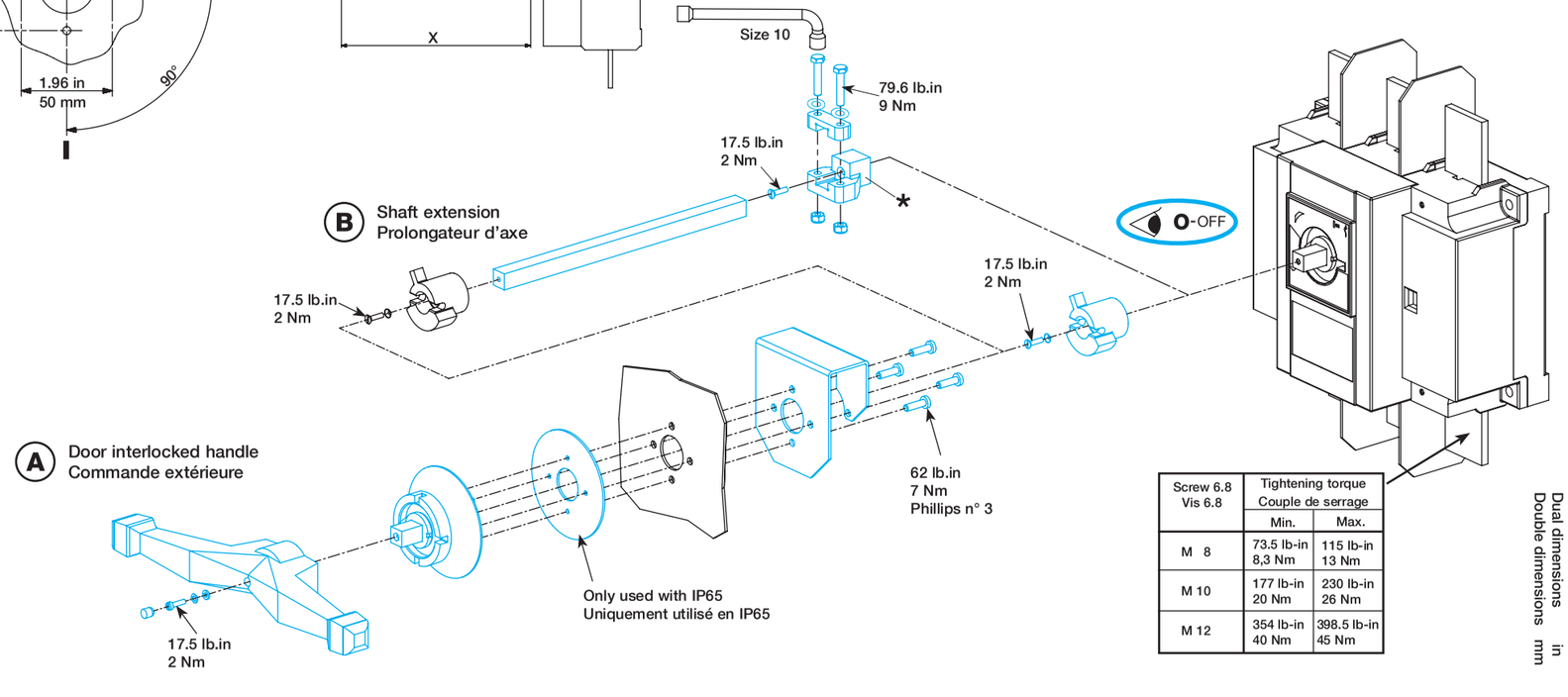

Screw 6.8 Vis 6.8	Tightening torque Couple de serrage	
	Min.	Max.
M 8	73.5 lb-in 8,3 Nm	115 lb-in 13 Nm
M 10	177 lb-in 20 Nm	230 lb-in 26 Nm
M 12	354 lb-in 40 Nm	398.5 lb-in 45 Nm
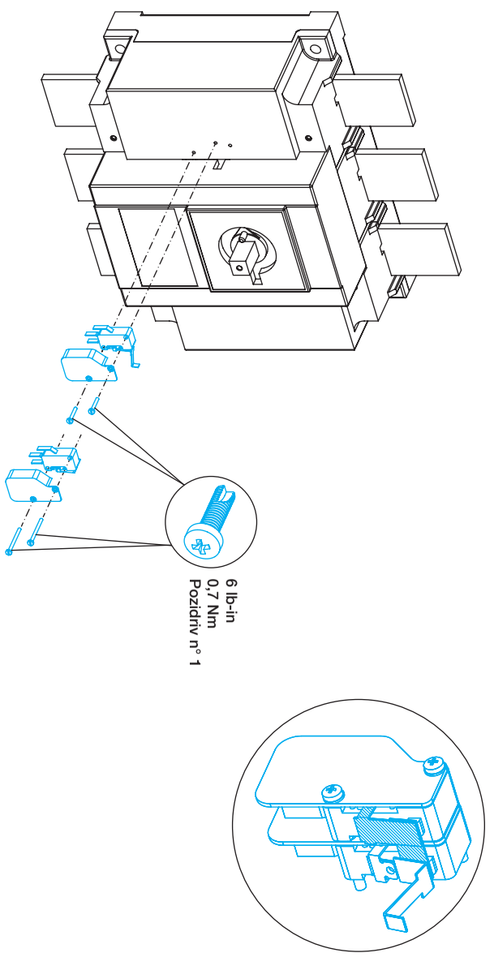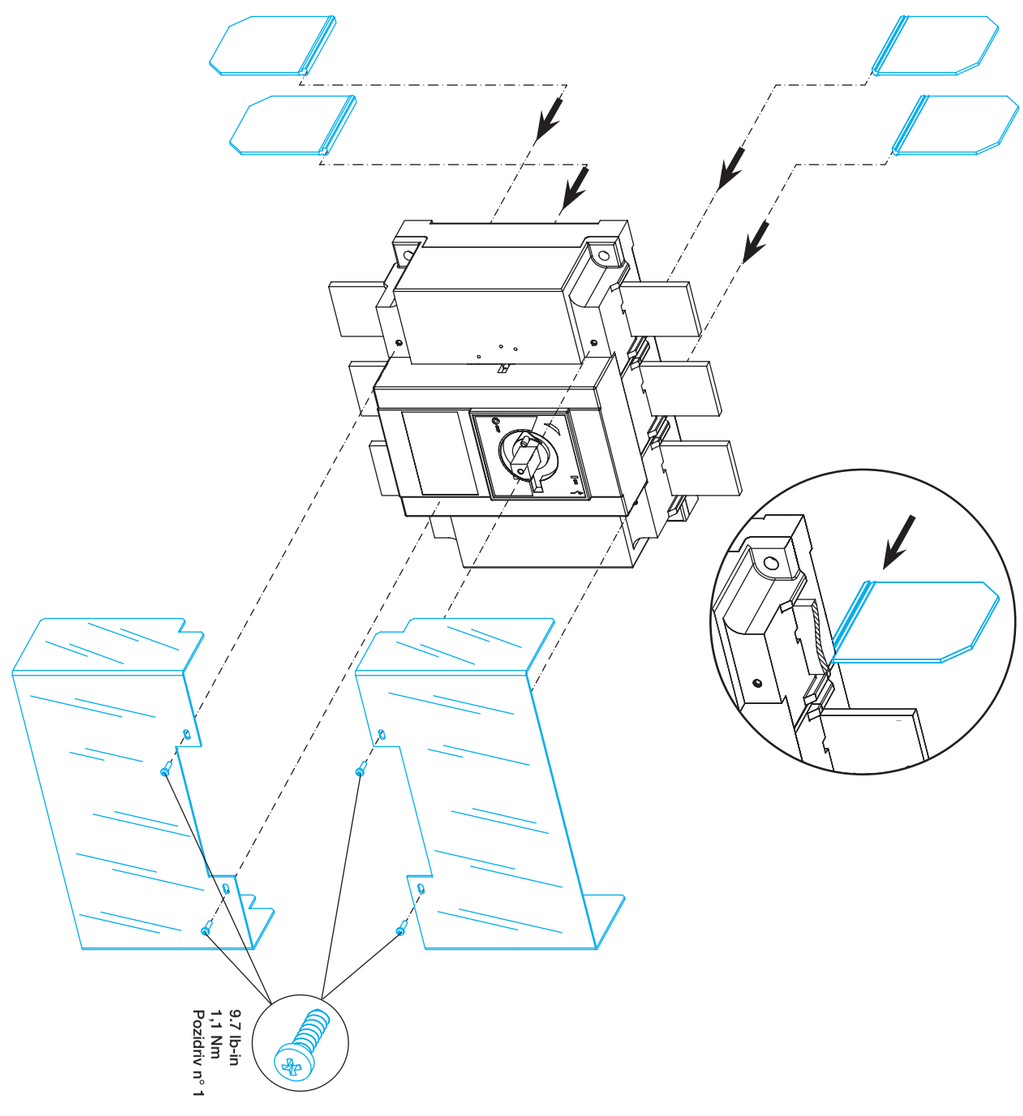
Dual dimensions in
Double dimensions mm