Low-voltage voltage transformers

For high transient voltage peaks and harmonic measurements up to 20 kHz

www.mbs-ag.com

Burden range I and II – Differences explained quickly!

In July 2011, the IEC 61869-3 (Additional requirements for inductive voltage transformers) replaced the previously valid IEC 60044-2. One of the most important changes is, that loads with a power factor of 1 are permissible in addition to the known loads with power factor 0.8.
The standard divides these burdens into two burden ranges:

The **burden range I** with a **power factor of 1** includes the following burdens::

1.0 – 2.5 – 5.0 – 10 VA

The **burden range II** with a **power factor of 0.8** includes the following burdens:

10 – 25 – 50 – 100 VA

Both burden ranges are tested for accuracy between 80 % and 120 % of the rated voltage. The burden range to be checked differs as follows:

Burden range I:

Each burden from **0 VA up to 100 %** of the rated burden with a **power factor of 1** must be within the accuracy class defined for the voltage transformer.

Burden range II:

Each burde from **25 % up to 100 %** of the rated burden with a **power factor of 0.8 inductive** must be within the accuracy class defined for the voltage transformer.

This regulation refers to the usage of modern measuring devices, which ordinarily have a voltage input with a high pure omic resistance. The power factor of 1 required in this case is covered by burden range I. An often encountered underloading is therefore also excluded. Details can be found in the illis-trations on the following page.

Error limits for voltage transformers for classes 0.2 ... 3 according to DIN EN 61869, part 3

Accuracy class	Voltage error ε_u	Phase displacement error $\Delta\varphi$
	± %	± min
0.2	0,2	10
0.5	0,5	20
1	1,0	40
3	3,0	-

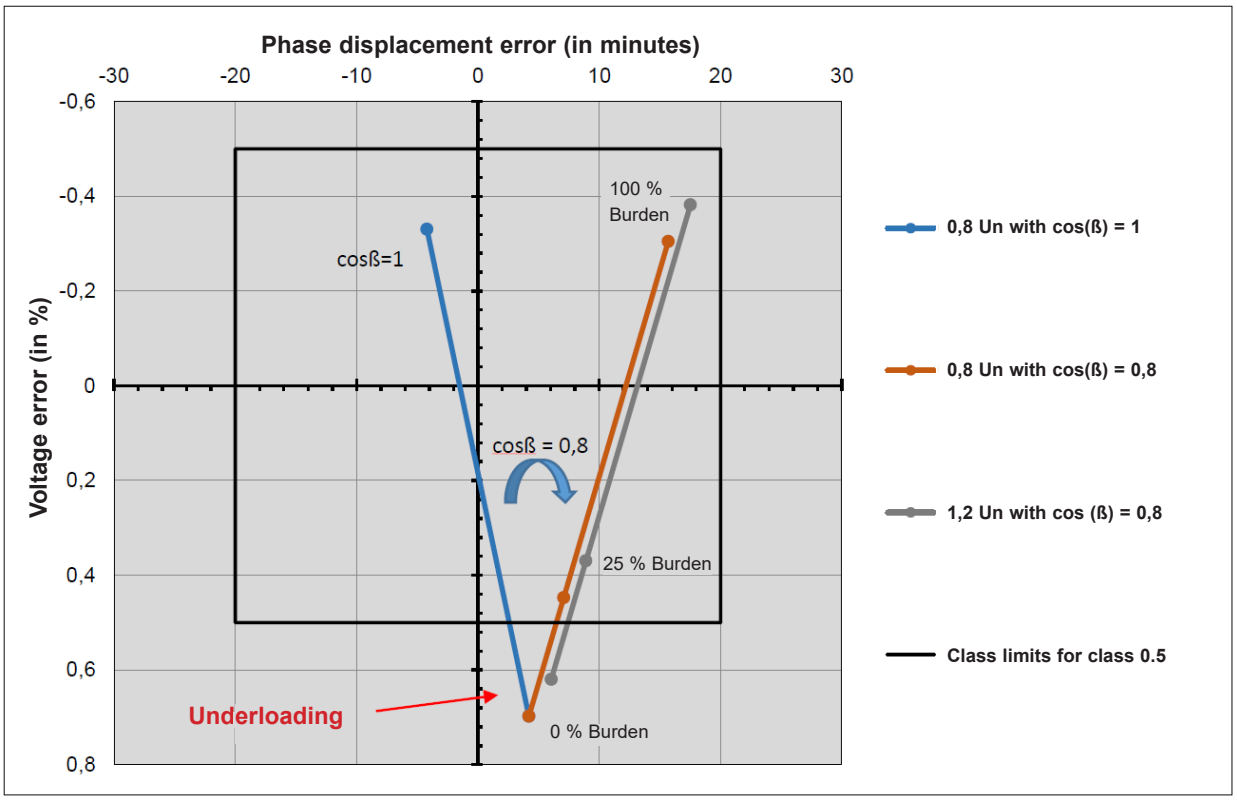

Fig. 1: Exemplary error chart of voltage transformer BR II in class 0.5

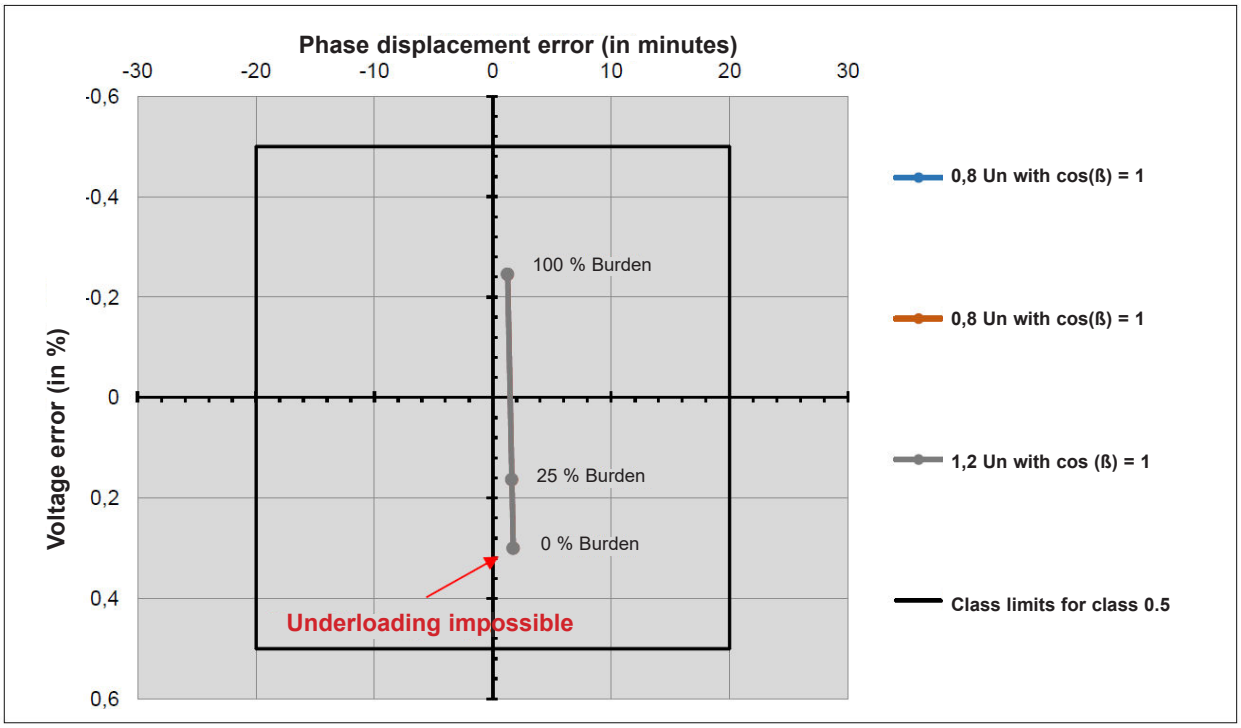

Fig. 2: Exemplary error chart of voltage transformer BR I in class 0.5

VTLS(-L)/VTLD(-L) - One- and two-pole isolated voltage transformers

Due to their physical design, MBS AG's low-voltage voltage transformers have a higher dielectric strength and generate only very low heat losses, due to the use of low-loss toroidal cores. Additionally there are no typical resonance points below 20 kHz. So they are predistined for measuring harmonics.
Our range of voltage transformers consists of one-pole isolated voltage transformers for connection between phase and earth and two-pole isolated voltage transformers for connection between phases.

Features / benefits

- Primary rated voltage range from 100/√3 V up to 1000/√3 V
  resp. 100 V up to 1000 V
- Secondary rated voltage 100/√3 V or 100 V
- Accuracy: Measuring: cl.0.2 / 0.5 / 1
  Protection: cl. 3P / 6P
- Very low own-consumption of voltage transformers due to powerful toroidal cores
- Perfect for usage with modern measuring devices, since underloading is not possible in burden range 1 (acc. to IEC 61869-3), please see the following order list
- Very easy connection (primary + secondary) via screw connection M5 x 8

General technical characteristics

- Nominal frequency: 50 or 60 Hz
- Maximum operating voltage U_m
  for U_{pr} ≤ 600/√3 V or 600 V: 0.72 kV r.m.s.
  for U_{pr} > 600/√3 V or 600 V: 1.2 kV r.m.s.
- Continuous operating voltage: 1.2 x U_{pr}
- Rated voltage factor F_V: 1.9 x U_{pr} / 8h (VTLS)
- Isolation class: E
- Operating temperature range: - 5°C … +50°C
- Storage temperature range: -40°C … +85°C
- Protection class acc. IEC 60529: IP 20
- Weight: approx. 2.13 kg

Subject to technical modifications without notice
Please note, that the above mentioned data are standard values. Other values upon request.

Connection drawings

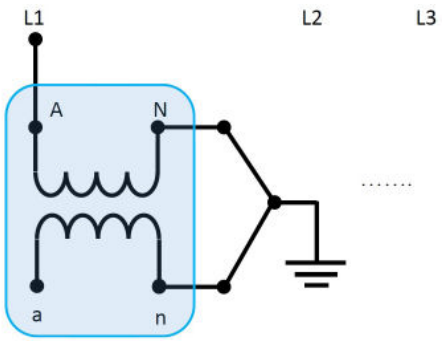

Connection of voltage transformer VTLS(-L)
phase-earth

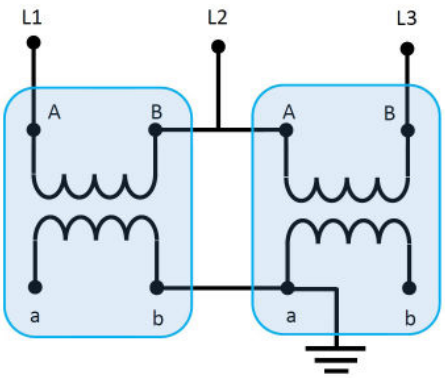

Connection of two voltage transformers VTLD(-L)
phase-phase (2-watt-meter circuit / Aron circuit)

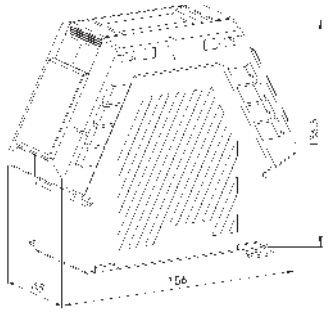

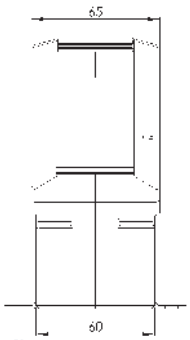

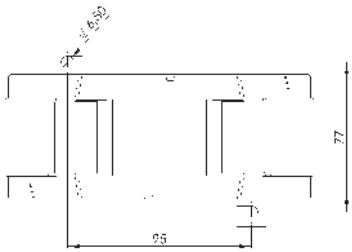

Order list - VTLS (one-pole isolated, not galvanically isolated)

Max. operation voltage U_m	Primary rated voltage U_{pr}	Secondary rated voltage 100/√3 V - Nominal frequency: 50 Hz				
		cl. 0.2 / 3P (BR 1)	cl.0.5 / 3P (BR 1)	cl.1 / 3P (BR 1)	cl.3 / 3P (BR 2)	VA_{th}
		0-1 VA	0-2.5 VA	0-5 VA	15 VA	
		Order no.	Order no.	Order no.	Order no.	
0.72 kV	100/√3 V	601-0001	601-0020	601-0040	601-0060	25
	110/√3 V	601-0002	601-0021	601-0041	601-0061	25
	200/√3 V	601-0003	601-0022	601-0042	601-0062	25
	220/√3 V	601-0004	601-0023	601-0043	601-0063	25
	230/√3 V	601-0005	601-0024	601-0044	601-0064	25
	380/√3 V	601-0006	601-0025	601-0045	601-0065	25
	400/√3 V	601-0007	601-0026	601-0046	601-0066	25
	500/√3 V	601-0008	601-0027	601-0047	601-0067	25
	600/√3 V	601-0009	601-0028	601-0048	601-0068	25
1.2 kV	660/√3 V	601-0010	601-0029	601-0049	601-0069	25
	690/√3 V	601-0011	601-0030	601-0050	601-0070	25
	750/√3 V	601-0012	601-0031	601-0051	601-0071	25
	800/√3 V	601-0014	601-0033			
	1000/√3 V	601-0013	601-0032	601-0052	601-0072	25

BR 1: Burden range 1: cos phi = 1
BR 2: Burden range 2: cos phi = 0.8

Order list - VTLD (two-pole isolated , galvanically isolated)

Max. operation voltage U_m	Primary rated voltage U_{pr}	Secondary rated voltage 100 V - Nominal frequency: 50 Hz					
		cl. 0.2 (BR 1)	cl.0.5 (BR 1)	cl.1 (BR 1)	cl.1 (BR 2)	cl.3 (BR 2)	VA_{th}
		0-2.5 VA	0-5 VA	0-10 VA	10VA	25 VA	
		Order no.	Order no.	Order no.	Order no.	Order no.	
0.72 kV	100 V	602-0001	602-0020	602-0040	602-0060	602-0080	25
	110 V	602-0002	602-0021	602-0041	602-0061	602-0081	25
	200 V	602-0003	602-0022	602-0042	602-0062	602-0082	25
	220 V	602-0004	602-0023	602-0043	602-0063	602-0083	25
	230 V	602-0005	602-0024	602-0044	602-0064	602-0084	25
	380 V	602-0006	602-0025	602-0045	602-0065	602-0085	25
	400 V	602-0007	602-0026	602-0046	602-0066	602-0086	25
	500 V	602-0008	602-0027	602-0047	602-0067	602-0087	25
	600 V	602-0009	602-0028	602-0048	602-0068	602-0088	25
1.2 kV	660 V	602-0010	602-0029	602-0049	602-0069	602-0089	25
	690 V	602-0011	602-0030	602-0050	602-0070	602-0090	25
	750 V	602-0012	602-0031	602-0051	602-0071	602-0091	25
	800 V	602-0014	602-0033		602-0073	602-0093	
	1000 V	602-0013	602-0032	602-0052	602-0072	602-0092	25

BR 1: Burden range 1: cos phi = 1
BR 2: Burden range 2: cos phi = 0.8

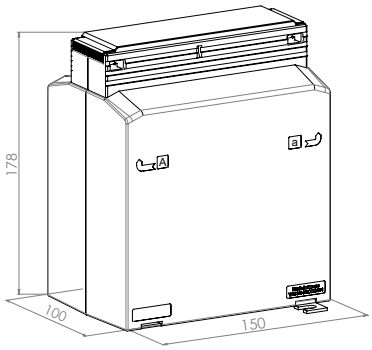

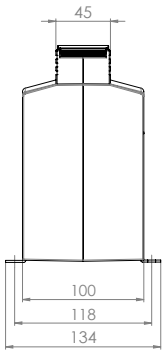

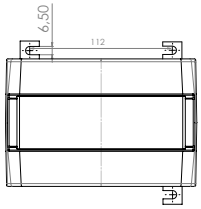

Order list - VTLS-L (one-pole isolated, not galvanically isolated)

Max. operation voltage U_m	Primary rated voltage U_{pr}	Secondary rated voltage 100/√3 V - Nominal frequency: 50 Hz			
		cl. 0.5 (BB 1)	cl.0.5 (BB 2)	cl.1 (BB 2)	VA_{th}
		0-25 VA	25 VA	50 VA	
		Order no.	Order no.	Order no.	
0.72 kV	100/√3 V	603-0001	603-0021	603-0041	100
	110/√3 V	603-0002	603-0022	603-0042	100
	200/√3 V	603-0003	603-0023	603-0043	100
	220/√3 V	603-0004	603-0024	603-0044	100
	230/√3 V	603-0005	603-0025	603-0045	100
	380/√3 V	603-0006	603-0026	603-0046	100
	400/√3 V	603-0007	603-0027	603-0047	100
	500/√3 V	603-0008	603-0028	603-0048	100
	600/√3 V	603-0009	603-0029	603-0049	100
1.2 kV	660/√3 V	603-0010	603-0030	603-0050	100
	690/√3 V	603-0011	603-0031	603-0051	100
	750/√3 V	603-0012	603-0032	603-0052	100
	1000/√3 V	603-0013	603-0033	603-0053	100

BR 1: Burden range 1: cos phi = 1
BR 2: Burden range 2: cos phi = 0.8

Order list - VTLD-L (two-pole isolated , galvanically isolated)

Max. operation voltage U_m	Primary rated voltage U_{pr}	Secondary rated voltage 100 V - Nominal frequency: 50 Hz			
		cl. 0.5 (BB 1)	cl.0.5 (BB 2)	cl.1 (BB 2)	VA_{th}
		0-50 VA	50 VA	100 VA	
		Order no.	Order no.	Order no.	
0.72 kV	100 V	604-0001	604-0021	604-0041	100
	110 V	604-0002	604-0022	604-0042	100
	200 V	604-0003	604-0023	604-0043	100
	220 V	604-0004	604-0024	604-0044	100
	230 V	604-0005	604-0025	604-0045	100
	380 V	604-0006	604-0026	604-0046	100
	400 V	604-0007	604-0027	604-0047	100
	500 V	604-0008	604-0028	604-0048	100
	600 V	604-0009	604-0029	604-0049	100
1.2 kV	660 V	604-0010	604-0030	604-0050	100
	690 V	604-0011	604-0031	604-0051	100
	750 V	604-0012	604-0032	604-0052	100
	1000 V	604-0013	604-0033	604-0053	100

BR 1: Burden range 1: cos phi = 1
BR 2: Burden range 2: cos phi = 0.8

Notes

- Current transformers for industry
- Current transformers for tariffs
- Accessories for current transformers
- Medium-voltage transformers
- Bus bar insulators / -supports
- Shunts

- Voltage transformers
- All current sensors
- Measuring transducers
- Energy meters with or without MID approval
- Accessories for energy meters
- Panel board heaters, filter fans, roof fans and control units

www.mbs-ag.com

MBS AG
Eisbachstraße 51 74429 Sulzbach-Laufen Germany
Phone: +49 7976 9851-0 Telefax: +49 7976 9851-90
info@mbs-ag.com www.mbs-ag.com

MBS IDNR 9.0.0221/1000/01-2022